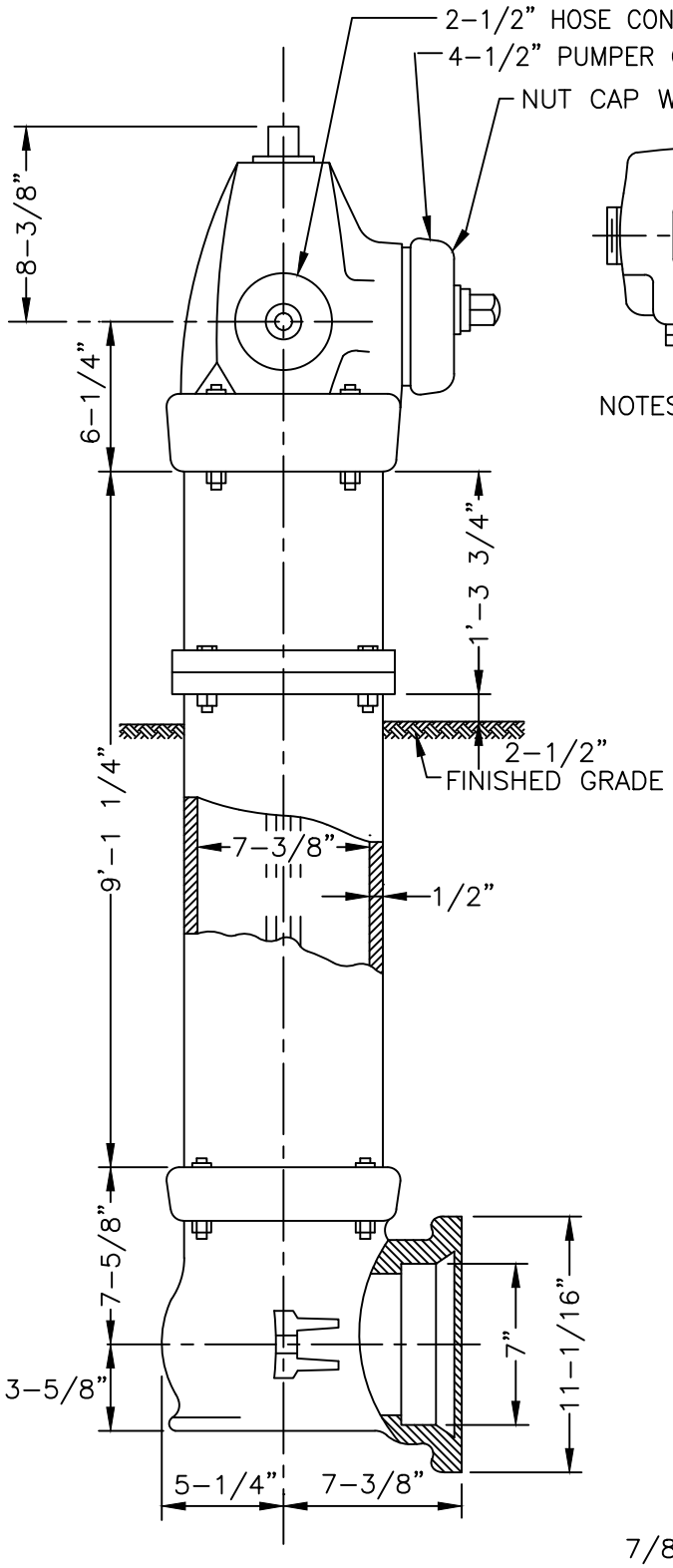

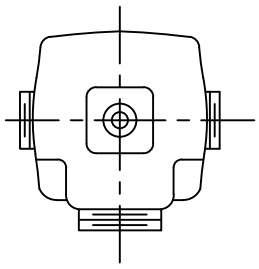

NOZZEL ARRANGEMENT

TWO– 2–1/2" HOSE NOZZLES
ONE– 4–1/2" PUMPER NOZZLE

NOTES:

1. 16" TRAFFIC BREAKOFF SECTION
2. 1–1/2" PENTAGON OPERATING NUT OPEN LEFT (1–1/2" POINT TO FLAT)
3. DRAIN HOLES ABOVE NORMAL WATER TABLE TO BE OPEN. DRAIN HOLES BELOW NORMAL TABLE TO BE PLUGGED, W/PUMPER NOZZLE PAINTED BLACK, AND TAG STATING "DRAIN HOLES PLUGGED."
4. HYDRANT TO BE ORDERED FOR 8'–6" BURY.
5. ALL HYDRANTS SHALL HAVE TAPPED DRAIN HOLES.
6. THE HYDRANT BOTTOM SHALL BE DUCTILE IRON, FUSHION BONDED EPOXY COATED IN AND OUT.
7. GRADE 304 STAINLESS STEEL BOTTOM BOLTS.
8. 8–GAUGE TRACER REQUIRED ON ALL HYDRANT TEES FROM PVC WATERMAIN. TRACER WIRE SHALL BE PROTECTED AT THE SURFACE WITH A WEED WHIP COVER.

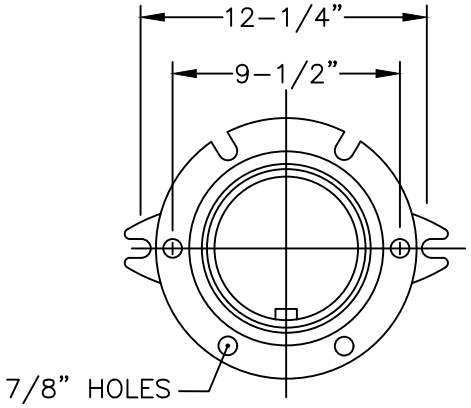

Lakeville	WATERMAIN PACER MODEL HYDRANT	PLATE NO. LV–WM–3 DATE 02/2024