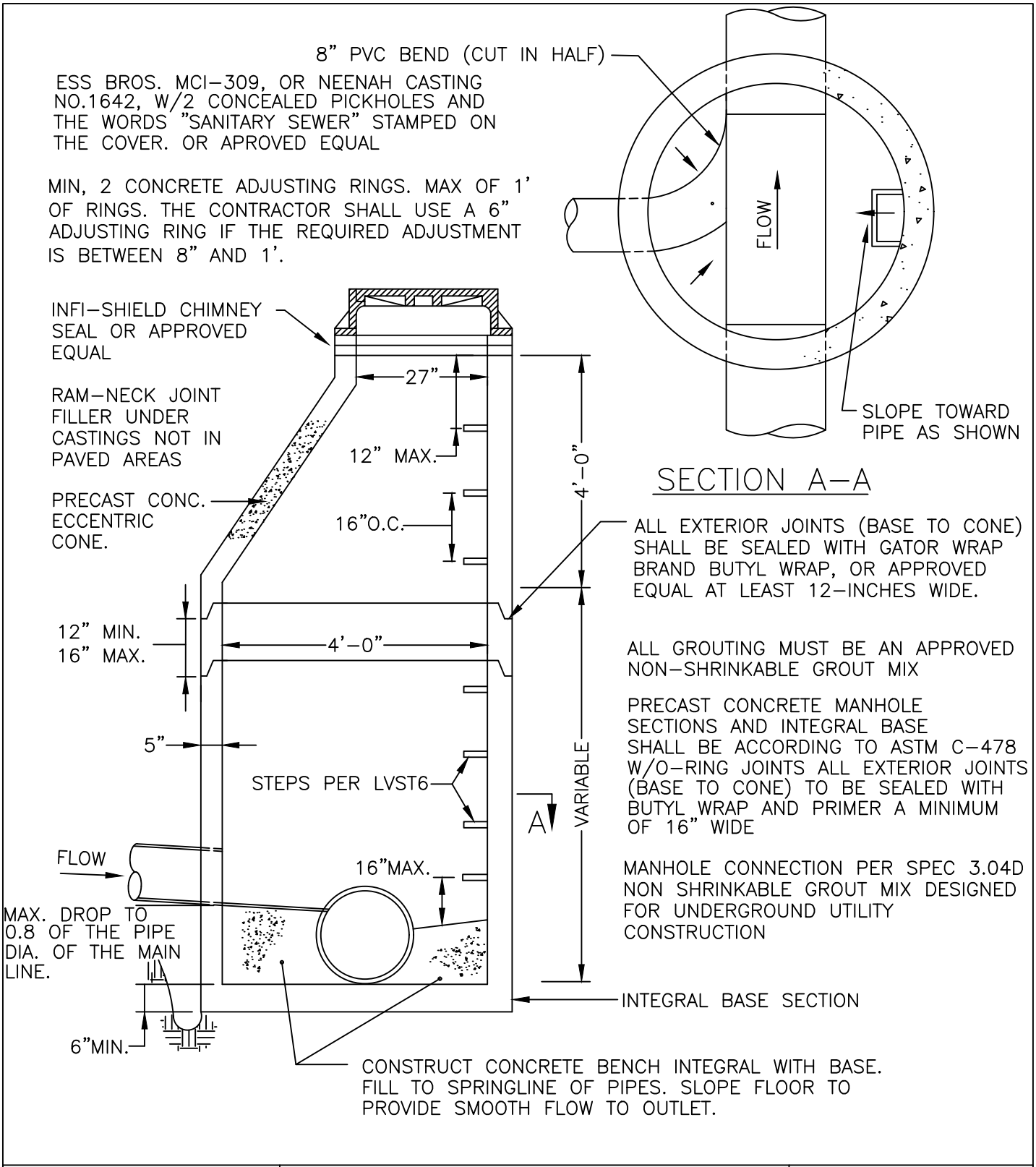

Lakeville

SANITARY SEWER INSIDE DROP MANHOLE (48"INSIDE DIAMETER)

PLATE NO. LV–SS–2

DATE 02/2024